Project	Date

Catalog Number	Type

QubePAK®3

Outdoor LED Wall Pack

Key Features

- Low-wattage, highly efficient patented LED replacement for legacy lighting technology.
- Robust die-cast aluminum housing protects integral components from harsh environments and optimizes thermal management.

Electrical

- 120-277V or 277-480V; 50/60Hz driver.
- 0-10V dimming standard.
- System power factor >90% and THD <20%.
- Operating temperature: -40°C to 40°C (-40°F to 104°F).

Mounting

- Designed for wall mounting above four feet from the ground.
- Housing is configured for mounting directly over a standard 4" outlet box (by others) or surface wiring via any of the convenient 1/2" threaded conduit entries.

Construction

- Housing is protected by a RoHS compliant, corrosion resistant powder coat finish.
- Standard architectural bronze finish.
- High impact, heat resistant borosilicate glass lens is hinged and won't degrade.
- Net Weight: 8.6 lbs.

Optics

- Industry leading LEDs with 3000K, 4000K, and 5000K CCT (minimum 70 CRI).
- Lumen Maintenance: 146,000 hours (L70). [1]

Warranty

- Backed by US LED's industry-leading Ten-Year Warranty.

Product Performance Summary

Lumen Output	Up to 5,340 lumens
Efficacy	Up to 134 LPW
CRI	≥ 70 CRI
Available CCT	3000K, 4000K & 5000K
Warranty	Ten-Year Warranty

Product Overview

The QubePAK®3 is an energy-efficient LED alternative for existing lighting technology like metal halide. This LED wall pack offers quality illumination in a popular, classic appearance. Perfect for any commercial exterior application, it keeps a traditional shape that easily maintains architectural aesthetics. The QubePAK®3 is ideal for new construction or retrofit projects that need ultra-long lifetime operation.

Product Applications

- Perimeter Areas
- Building Exteriors
- Security Lighting
- Wall Washing
- Parking Lots
- Educational Facilities
- Business Campuses
- Industrial Facilities
- Mall/Retail Areas
- Recreational Areas

Product Certifications

- ETL Listed for US & Canada
- Complies with UL1598 and CSA C22.2
- DLC Premium Listed
- Suitable for Wet Locations
- RoHS Compliant

Ordering Information

Example: DS-402U-3-UNVL-50-96-BZ

DS-402U					
Series	Variant	Input Voltage	CCT	Wattage	Finish
	3 Generation 3	UNVL 120-277V	30 3000K	96 960mA	BZ Bronze
		UNVH 277-480V	40 4000K		
			50 5000K		

Accessories
PC Photocell

1. US LED product 'Lifetimes' refer only to the LED light engine, not the power source, and are based on the Illuminating Engineering Society's TM21 Projected Lumen Maintenance methodology at a 25° C / 77° F ambient temperature. The lifetimes are solely meant to be a guide for expected LED degradation and not a warranty or predictive of their actual life, which can be affected by ambient temperatures and other factors.

QubePAK®3

Outdoor LED Wall Pack

USLED
Always the Right Choice!

Dimensions

Side View

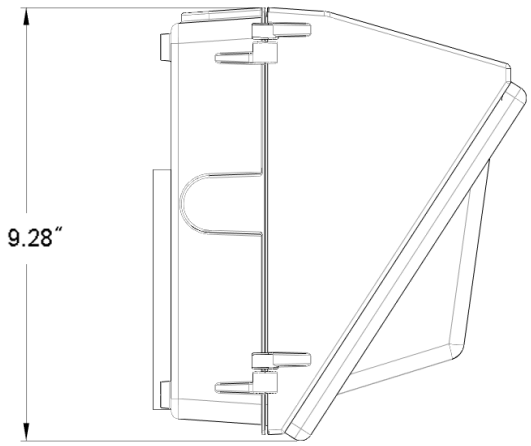

Top View

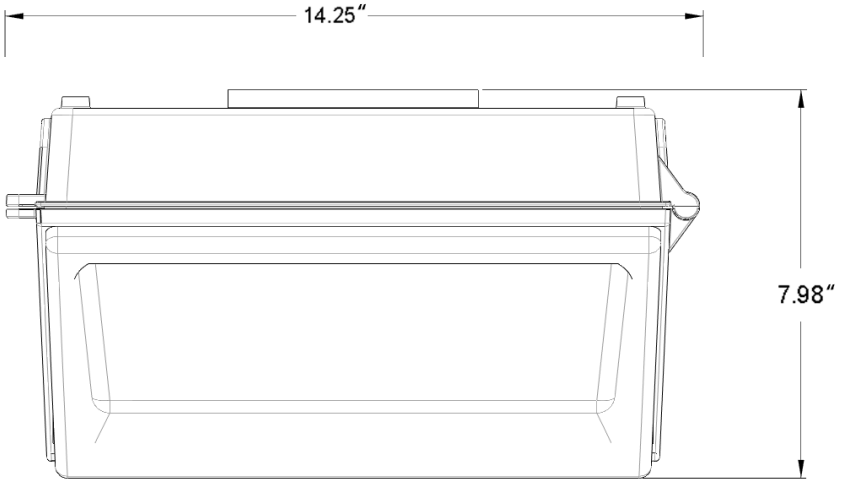

Performance Data

Luminaire Photometric Data

Model Number	**DS-402U-3-UNVL-50-96-BZ**
Issue Date	**07/12/2018**
IESNA	**LM-63-2002**
Lamp	**LED**
Total Input Watts	**39.9**
Total Lumens	**5,320**
Efficacy	**133 LPW**
BUG Rating	**B1-U4-G4**

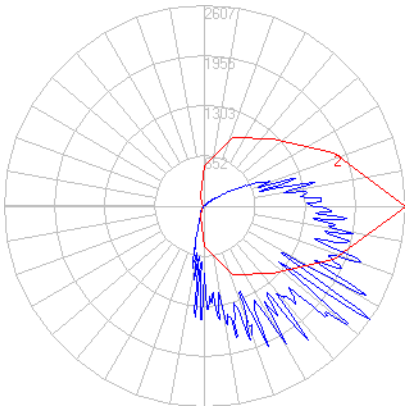

Model	CCT	System Level Power	Delivered Lumens	Efficacy	L70 Calculate Life	L85 Calculate Life
DS-402U-3-UNVL-30-96-BZ	3000K	40.0W	5,340	134 LPW	146,000 Hours	67,000 Hours
DS-402U-3-UNVL-40-96-BZ	4000K	39.9W	5,170	130 LPW	146,000 Hours	67,000 Hours
DS-402U-3-UNVL-50-96-BZ	5000K	39.9W	5,320	133 LPW	146,000 Hours	67,000 Hours